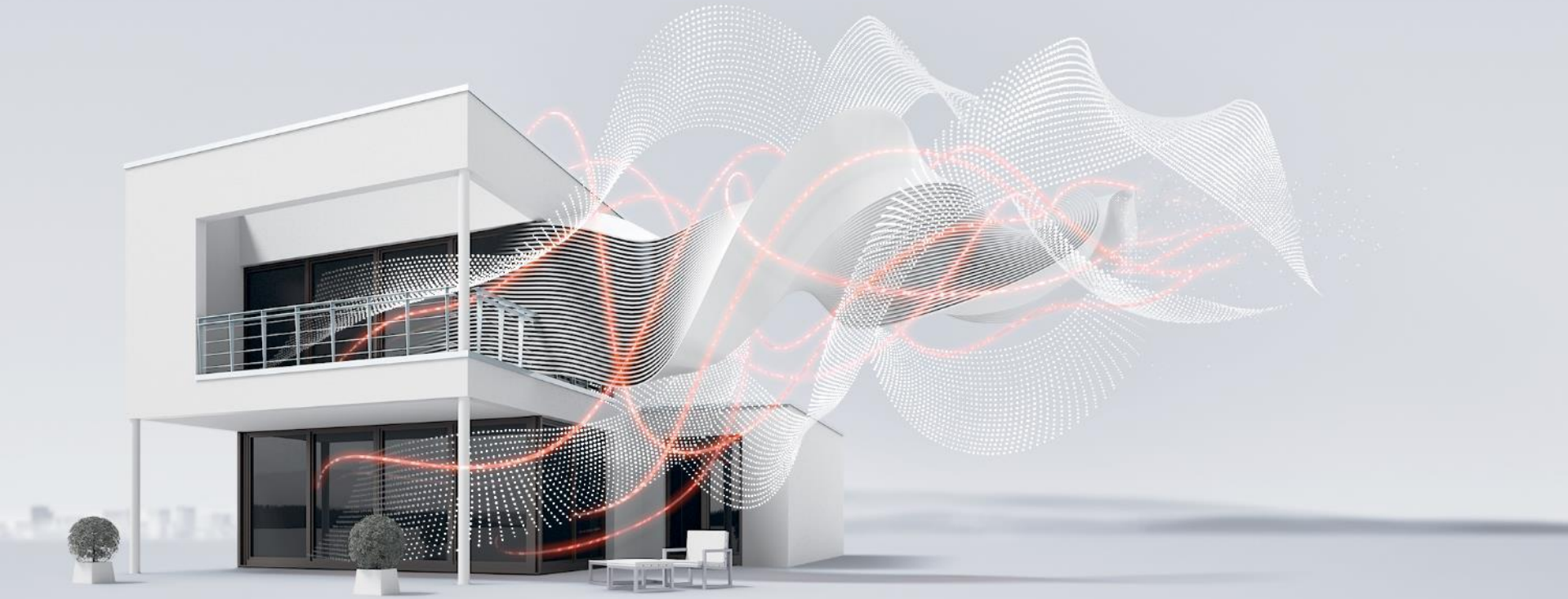

SOROCABA, BRASIL , DEZEMBRO 2018

TRIO-50.0/60.0-TM

Treinamento de Service

Rodrigo Campos

Agenda

TRIO-50.0/60.0-TM

- Introdução ao TRIO-50.0/60.0-TM
- Instalação (mecânica /eletrica)
- Procedimento de Comissionamento
- Interface do Usuário
- FirmWare upgrade
- Problemas conhecidos

TRIO-50.0/60.0

Modelos disponíveis

50kW 400Vac

TRIO-50.0-TL-OUTD (400Vac output)
(1 MPPT)

TRIO-TM-50.0 (400Vac output)
(3 MPPT)

60kW 480Vac

TRIO-60.0-TL-OUTD (480Vac output)
(1 MPPT)

TRIO-TM-60.0 (480Vac output)
(3 MPPT)

1 MPPT (TL series)

3 MPPT (TM series)

INSTALAÇÃO MECÂNICA

TRIO-50.0/60.0

Notas de Instalação Mecânica

Vertical placement

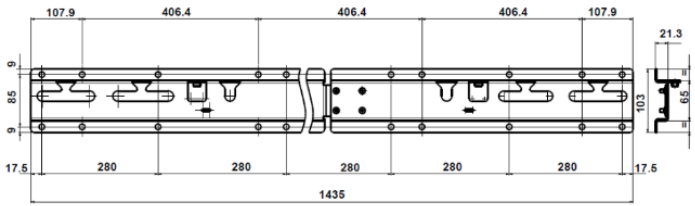

Mounting bracket Vertical

Horizontal placement

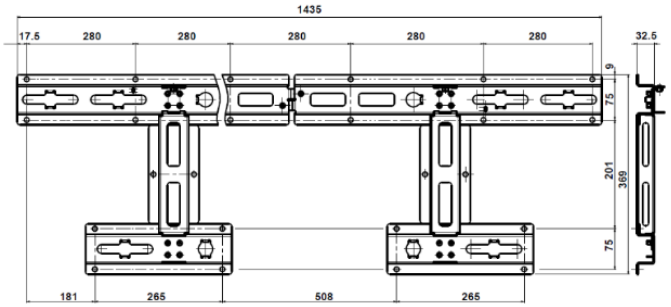

Mounting bracket Horizontal

©ABB

TRIO-50.0/60.0

Notas de Instalação Mecânica

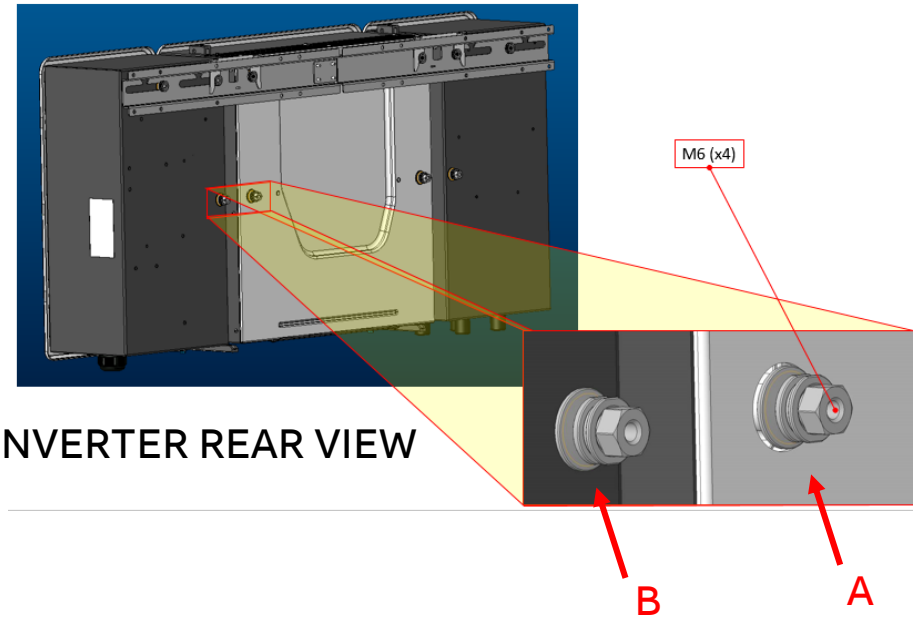

INVERTER REAR VIEW

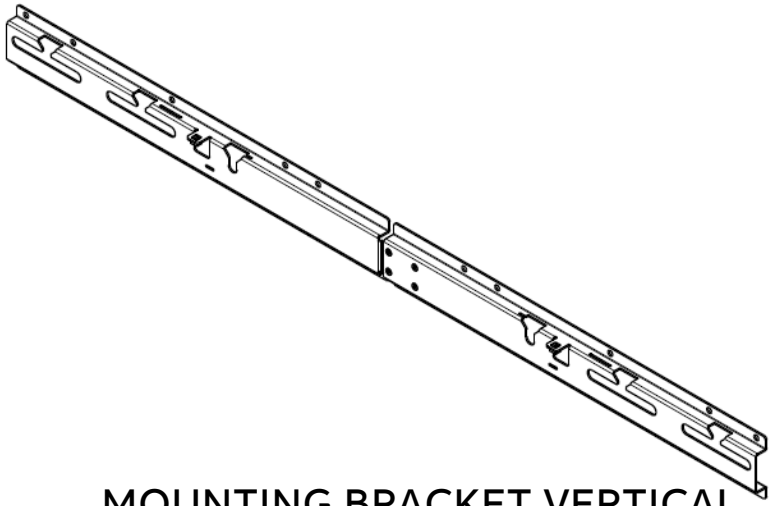

MOUNTING BRACKET VERTICAL

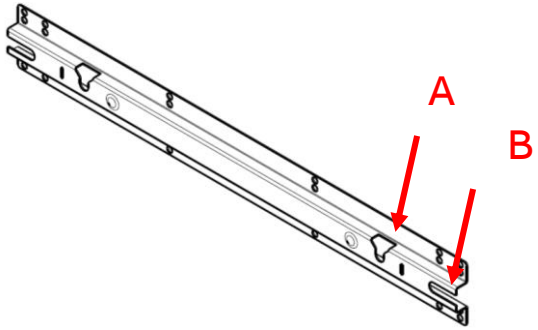

LOWER SUPPORT (OPTION)

Optional «lower support bar» can be used:

- to avoid oscillation of the inverter in case of wind (outdoor installation)
- to improve the fixing/securing of the inverter

TRIO-50.0/60.0

Notas de Instalação Mecânica

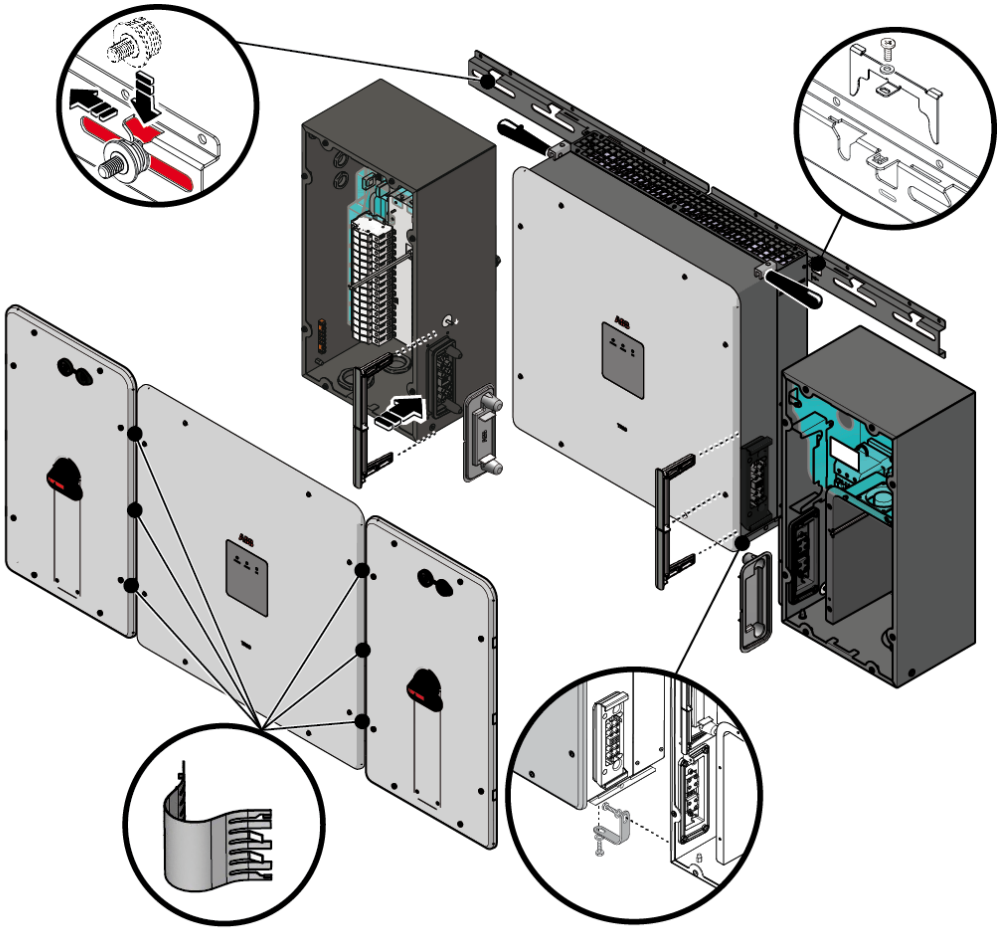

©ABB

TRIO-50.0/60.0

Notas de Instalação Mecânica

Procedimento de montagem

TRIO-50.0/60.0

Notas de Instalação Mecânica

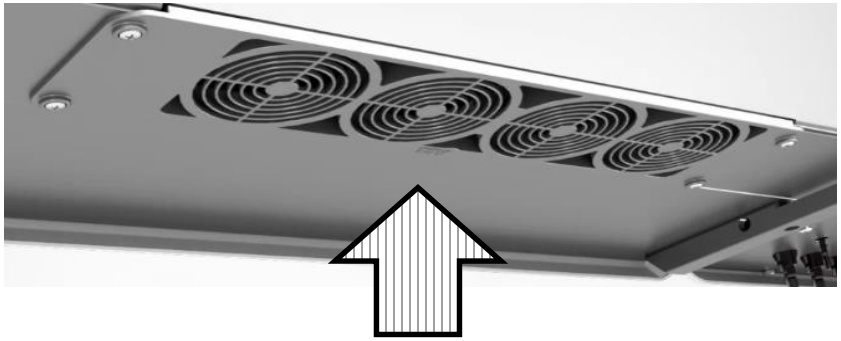

Upstream air flow

Field replaceable fan tray with 2+2 fans

(expected fans life =10 years)

2 fans controlled by booster temperature & pwr (variabile speed from 0 to ~ 6600 rpm)

2 fans controlled by inverter temperature & pwr (variabile speed from 0 to ~ 6600 rpm)

TRIO-50.0/60.0

Notas de Instalação Mecânica

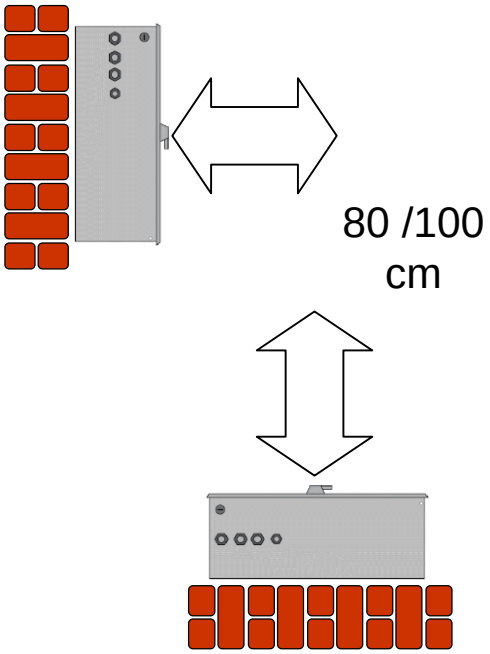

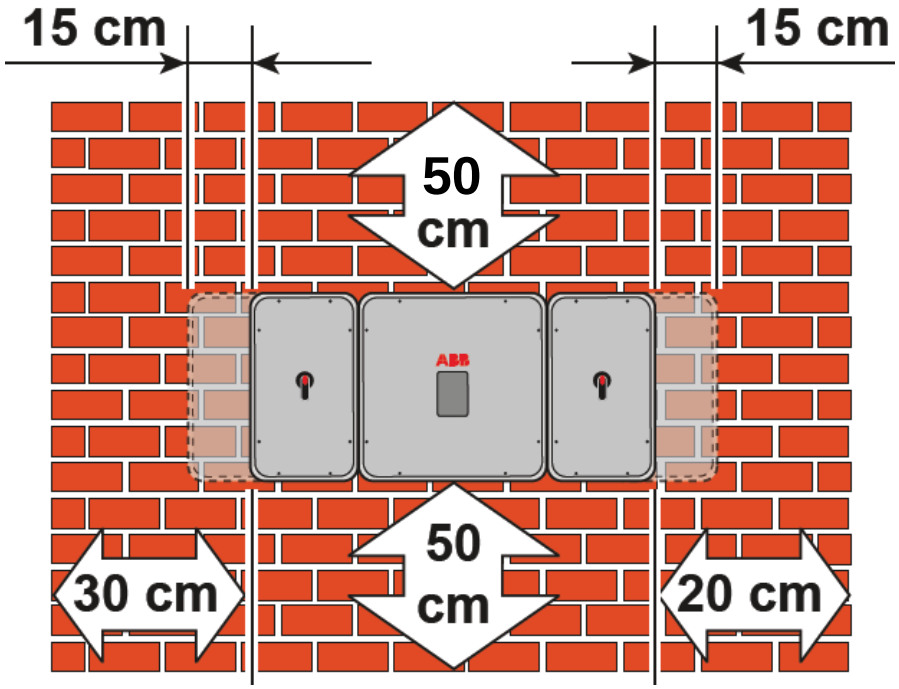

Front distance must also to permit installation and maintenance activity

TRIO-50.0/60.0

Notas de Instalação Mecânica

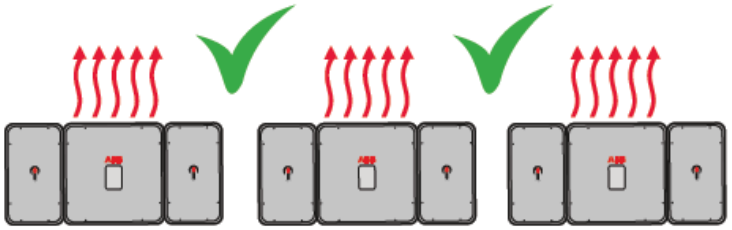

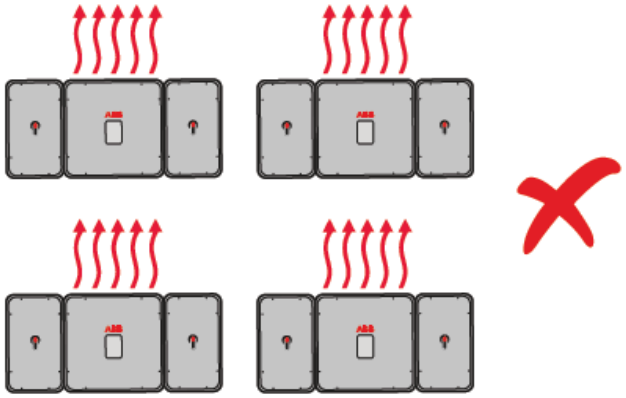

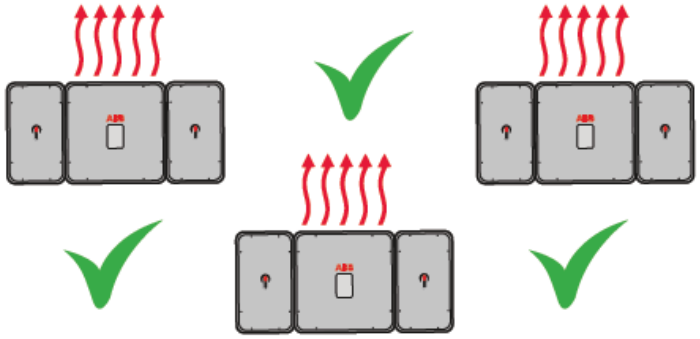

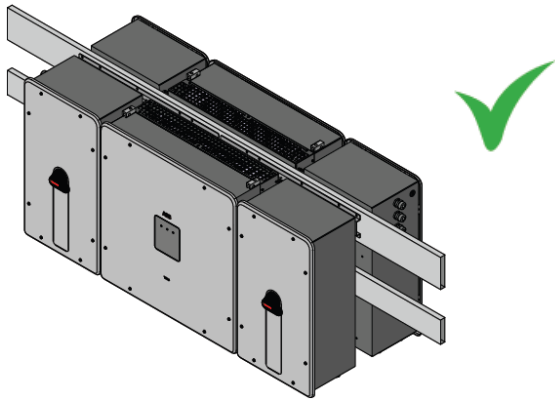

TRIO-50.0/60.0

Notas de Instalação Mecânica

Exemplo de Instalação

TRIO-50.0/60.0

Notas de Instalação Mecânica

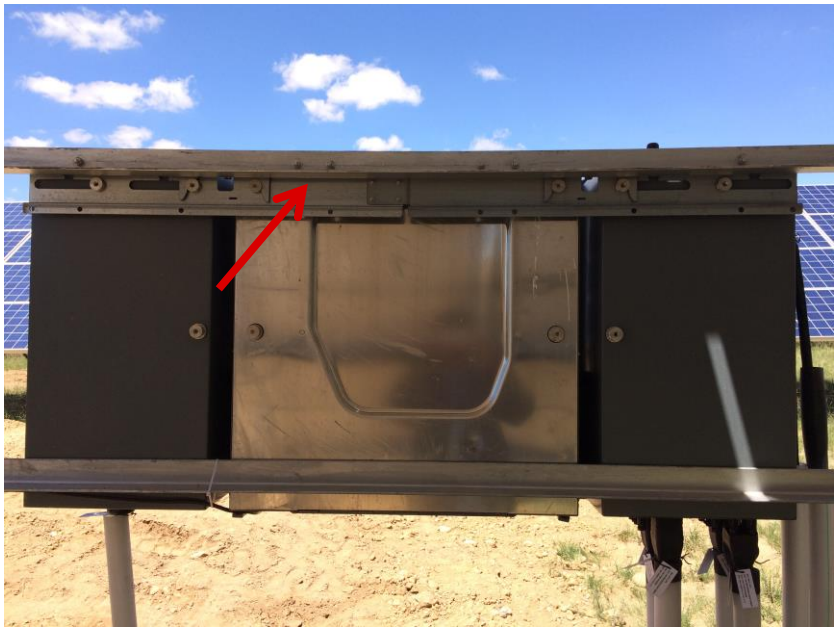

Exemplo de instalação **Incorreta**

Suporte mecânico inadequado (muito fraco) - Suporte de montagem em Cantoneira

TRIO-50.0/60.0

Notas de Instalação Mecânica

Exemplo de instalação **Incorreta**

Bloqueio de neve caminho de fluxo de ar do dissipador de calor

TRIO-50.0/60.0

Notas de Instalação Mecânica

Exemplo de instalação horizontal **Questionável**

Para acessar o inversor é necessário remover a proteção «telhado»

INTERFACE – USUÁRIO LOCALMENTE

(TRIO-TM-50.0/60.0)

TRIO-TM-50.0 (400Vac output)
(3 MPPT)

TRIO-TM-60.0 (480Vac output)
(3 MPPT)

TRIO-50.0/60.0

Interface – Usuário Local - TRIO-TM-50.0/60.0

4

Ethernet
Dinamic / static TCP IP

1

Internal embedd web-server
advanced diagnostic analysis
Inverter commissioning /parameters setting
Firmware upgrading
Internal data-logger

NOTE: Software: AURORA MANAGER-LITE via RS485 remains for service activities

2

Front LED's to indicate status of the unit

Display (DCWB option)

3

CONEXÕES RS485

TRIO-50.0/60.0

RS485

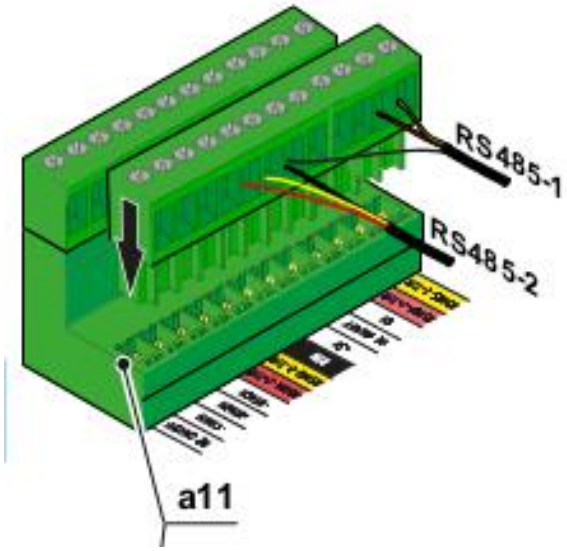

RS485-1 (FW upgrading)

- Modbus Proprietary map
- «Aurora» Proprietary protocol

RS485-2

- Modbus Sunspec Map
- Modbus Proprietary map
- «Aurora» Proprietary protocol

VSN 700

SW MANAGER-LITE

Two independent adjustable communication ports (RS485-1 and RS485-2) for monitoring and control purpose are available.

ETHERNET CONNECTIONS

(ONLY TRIO-TM-50.0/60.0)

TRIO-50.0/60.0

Ethernet

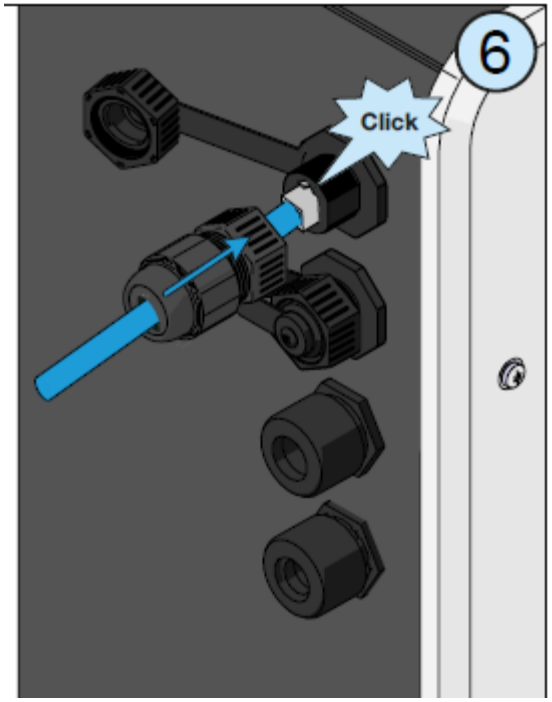

Two Ethernet ports are available in TRIO-TM (external plugs).

TRIO-50.0/60.0

Ethernet

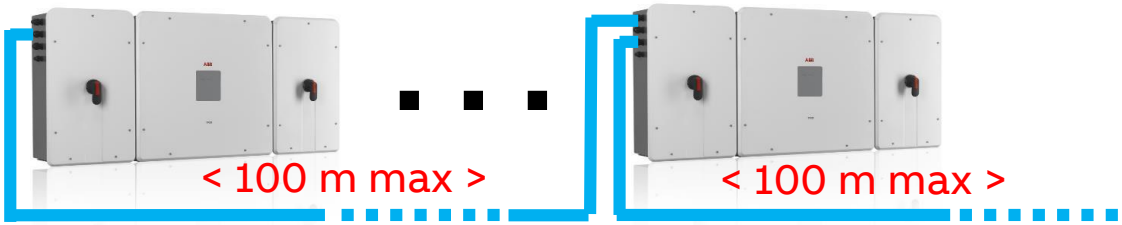

Ethernet line / open-ring

SWITCH

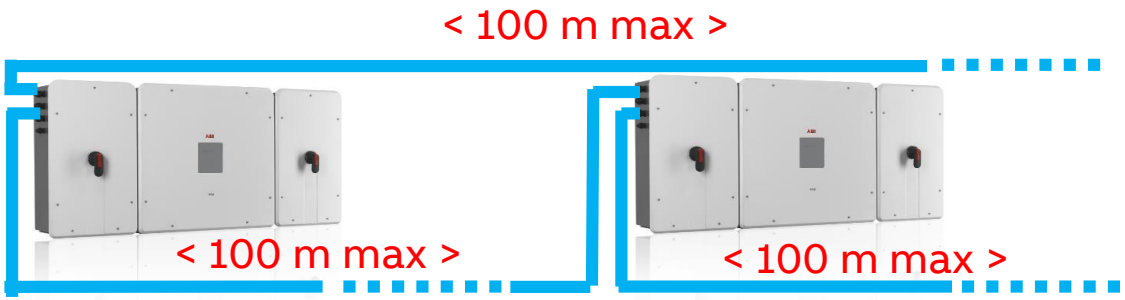

Ethernet line / closed-ring

SWITCH

TRIO-50.0/60.0

Ethernet

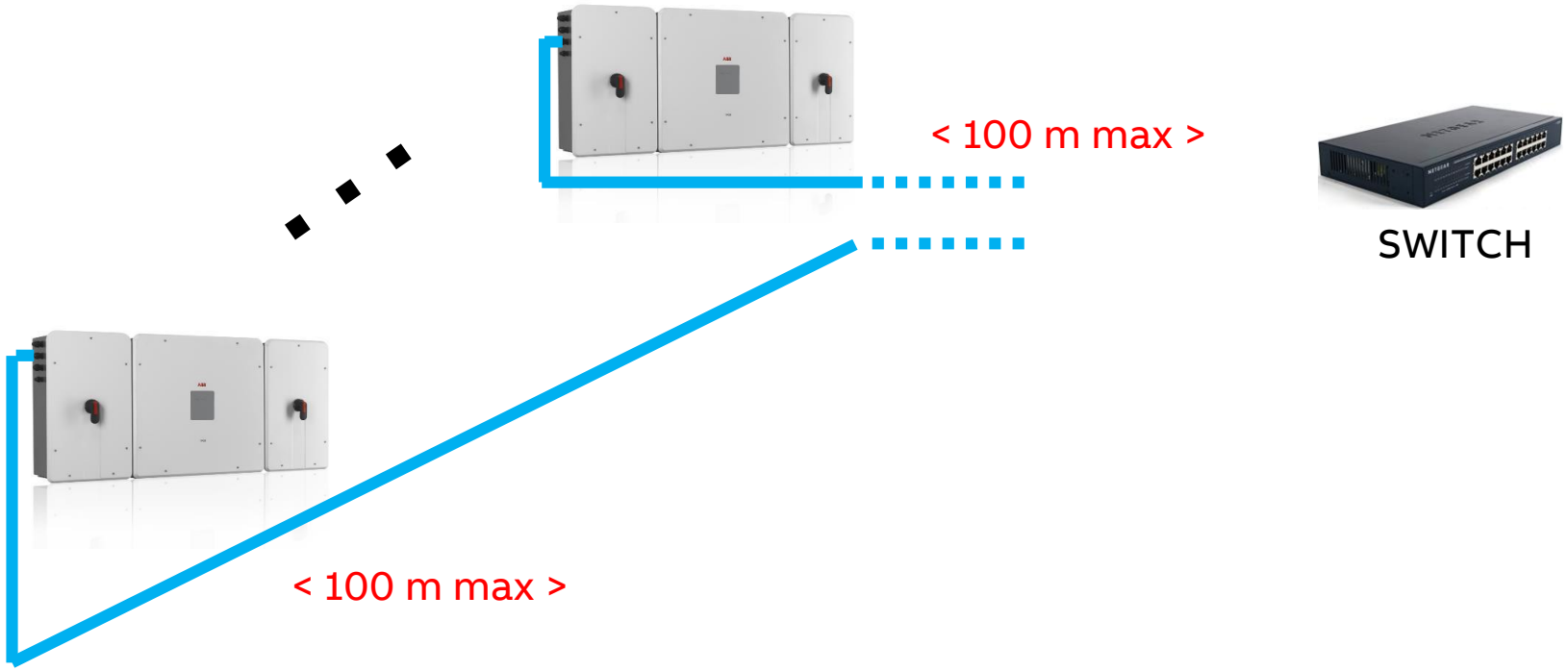

Ethernet line / star

ETAPAS DO COMISSIONAMENTO

(TRIO-TM-50.0/60.0)

TRIO-50.0/60.0

Comissionamento TRIO-TM-50.0/60.0

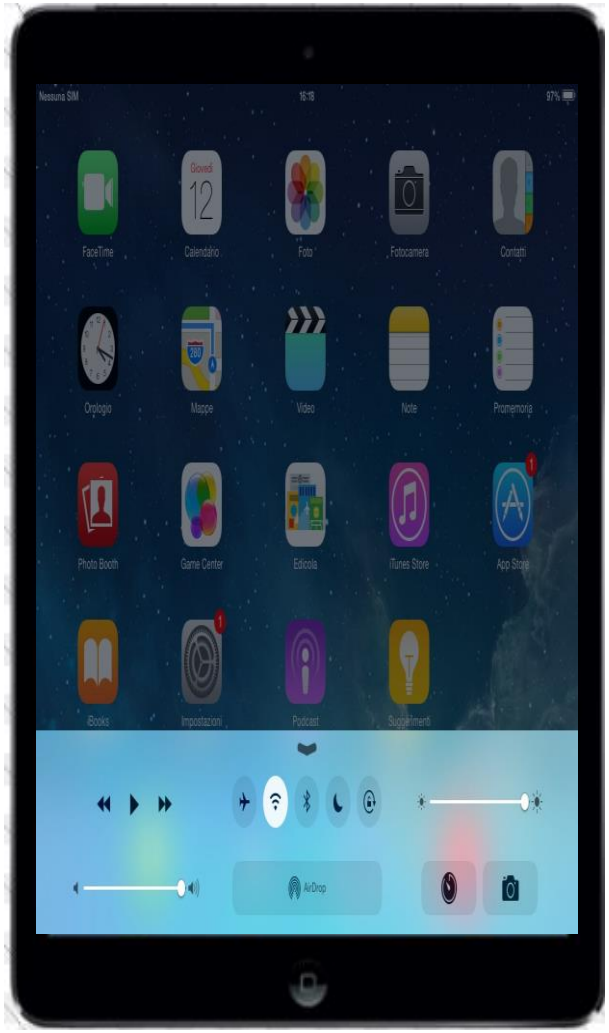

After about 60 sec. from power-on Inverter generates
 a WiFi network.
Access – Point name = **ABB- «MAC address»** (see label).
Smartphone/PC/Tablet must be connected to wifi network

Password: «ABBSOLAR» valid for first 24 hours
or «PRODUCT KEY» (side label) after 24 hours.

TRIO-50.0/60.0

Comissionamento TRIO-TM-50.0/60.0

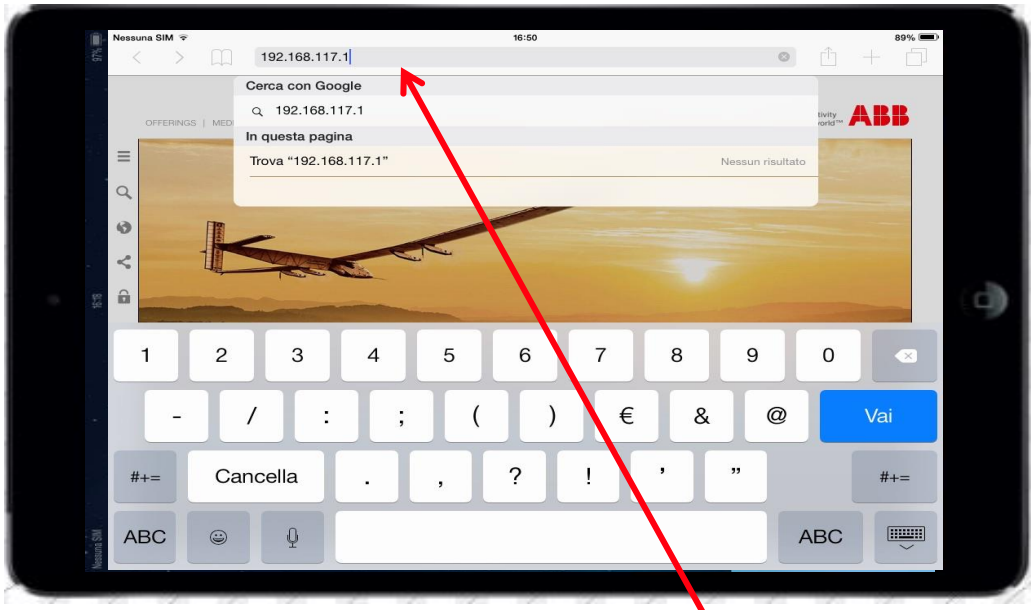

Open a browser and write in address bar: 192.168.117.1

IP Address:
192.168.117.1

TRIO-50.0/60.0

Comissionamento TRIO-TM-50.0/60.0

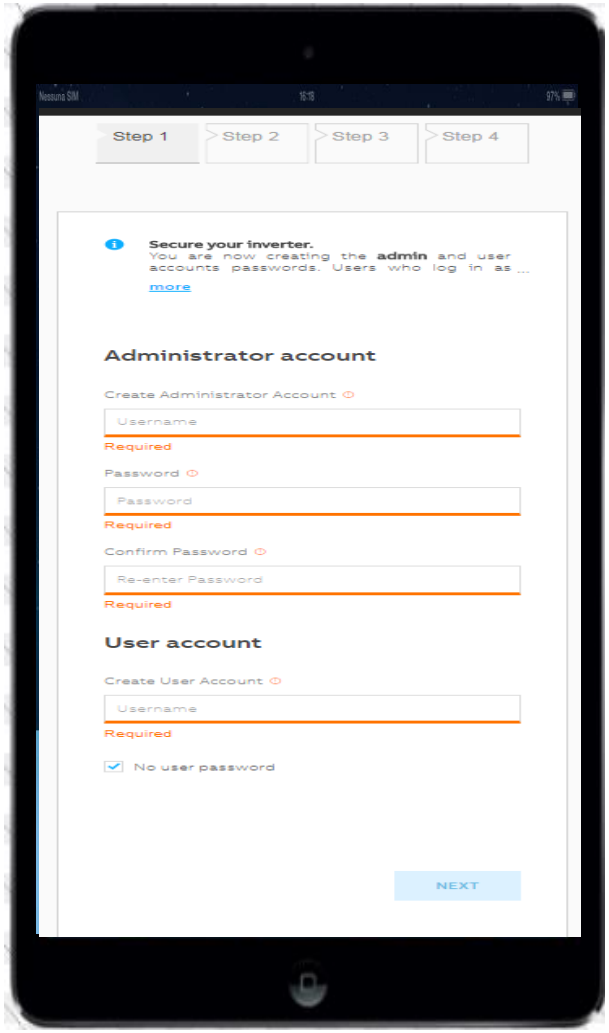

4 STEPS WIZARD

STEP 1

Create administrator and user account

TRIO-50.0/60.0

Comissionamento TRIO-TM-50.0/60.0

ROUTER

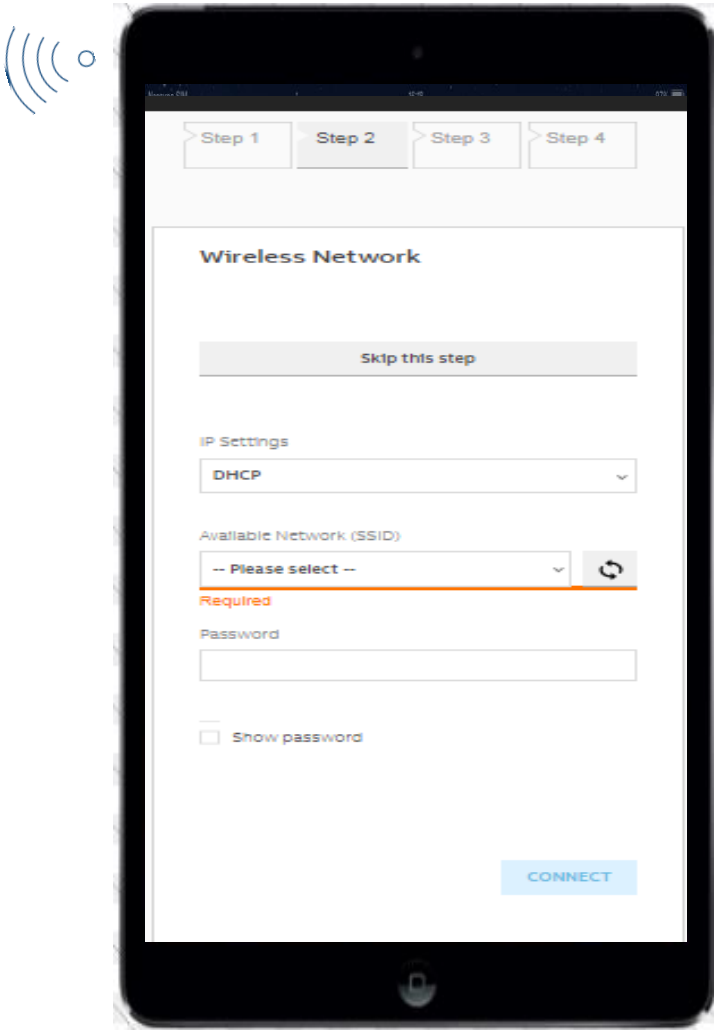

STEP 2

Connect inverter to external router if any

TRIO-50.0/60.0

Comissionamento TRIO-TM-50.0/60.0

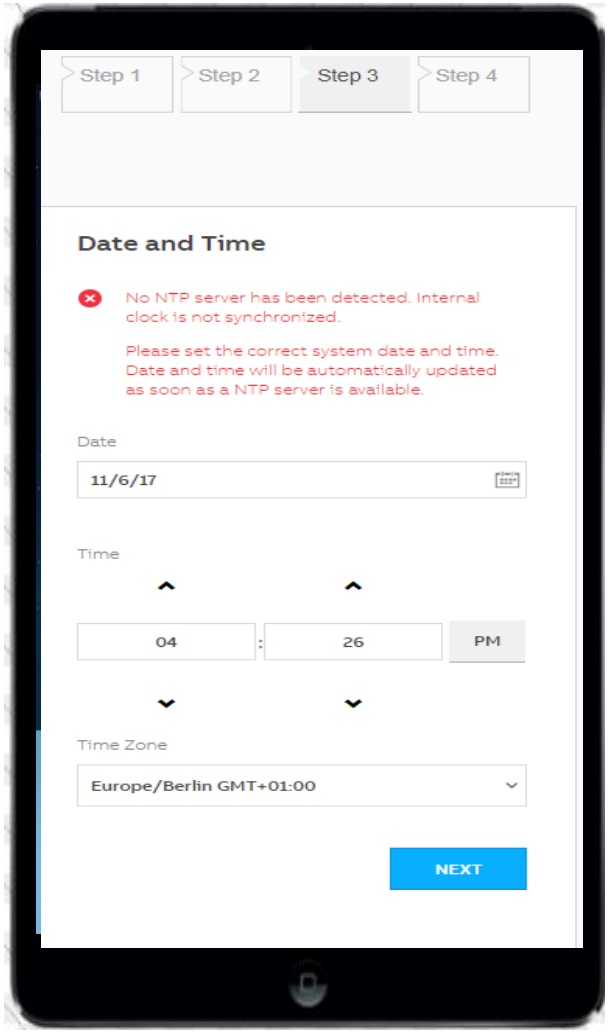

STEP 3

Controll and adjust the time/date

TRIO-50.0/60.0

Comissionamento TRIO-TM-50.0/60.0

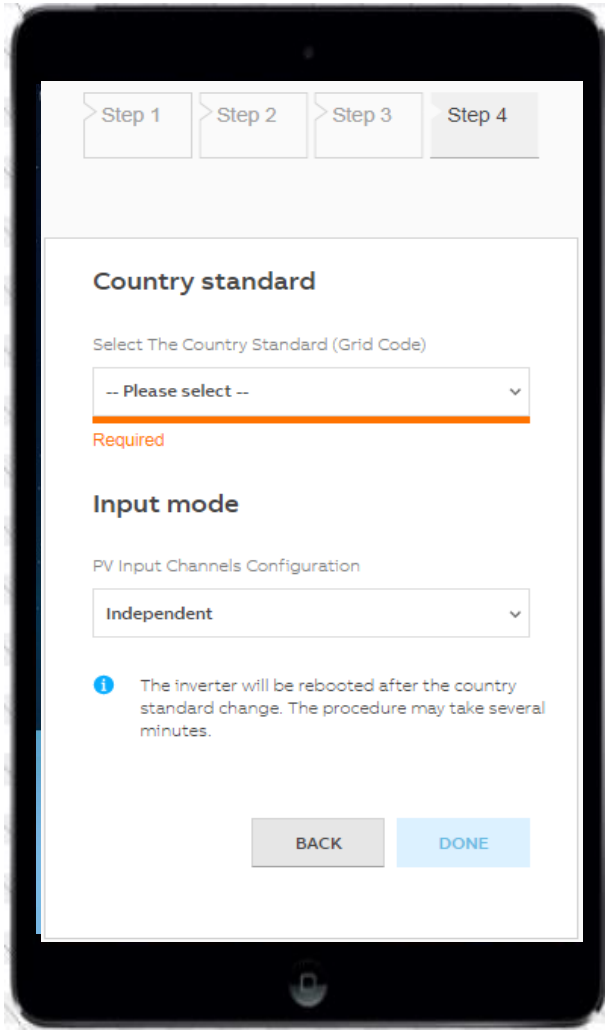

STEP 4

Select «Country Standard» (Grid- code)

Select «Input Mode» (MPPTs independent/Parallel)

TRIO-50.0/60.0

Comissionamento TRIO-TM-50.0/60.0

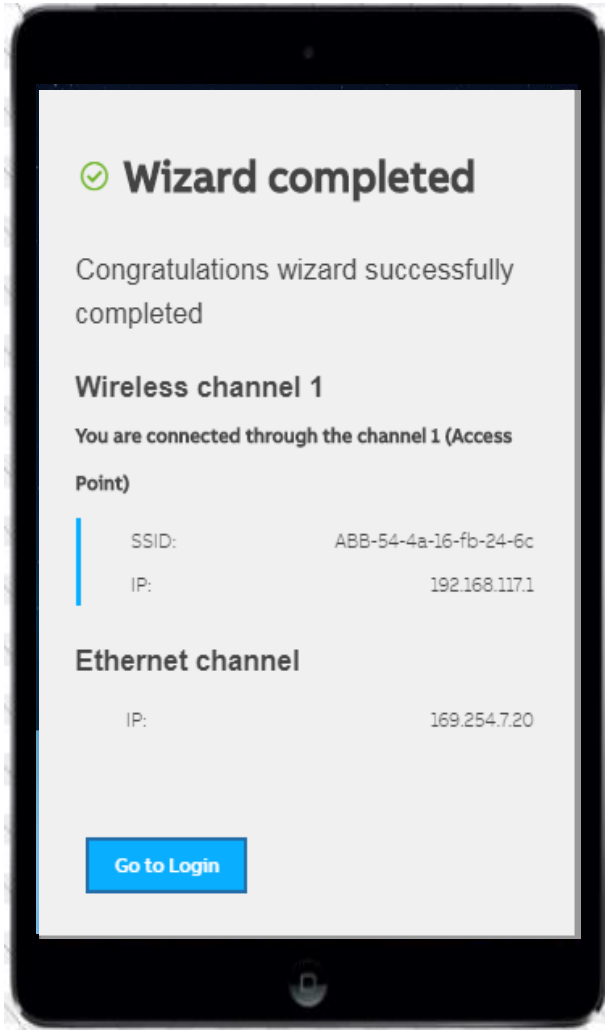

WIZARD COMPLETED CONFIRMATION

LOGIN IN WEB USER INTERFACE

(WEB UI)

(TRIO-TM-50.0/60.0)

TRIO-50.0/60.0

WEB User Interface TRIO-TM-50.0/60.0

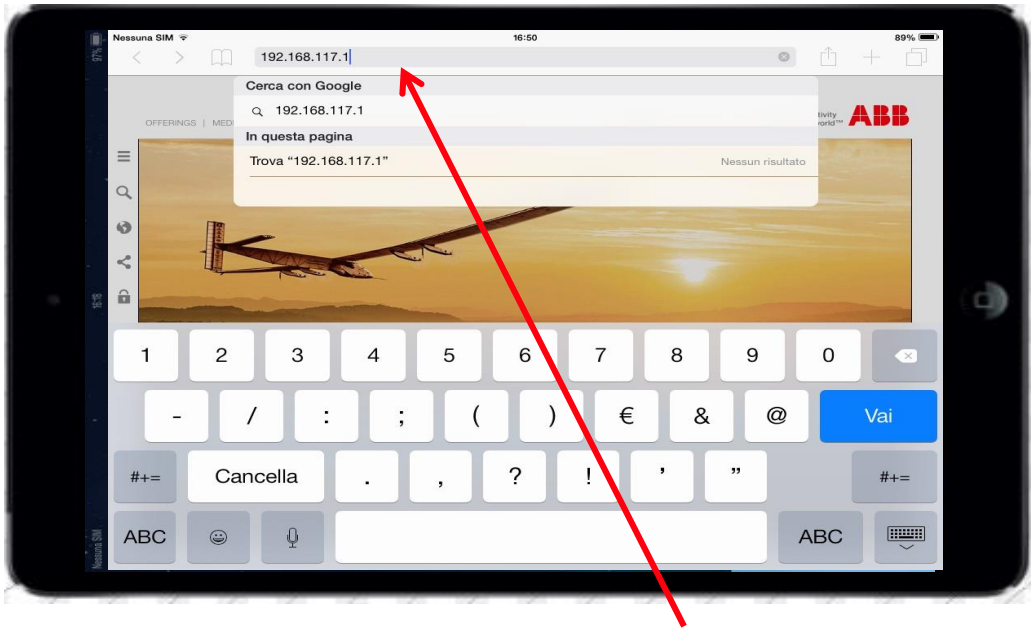

Após o comissionamento, abra um navegador

Escreva na barra de endereços o endereço IP: 192.168.117.1.

TRIO-50.0/60.0

WEB User Interface – TRIO-TM-50.0/60.0

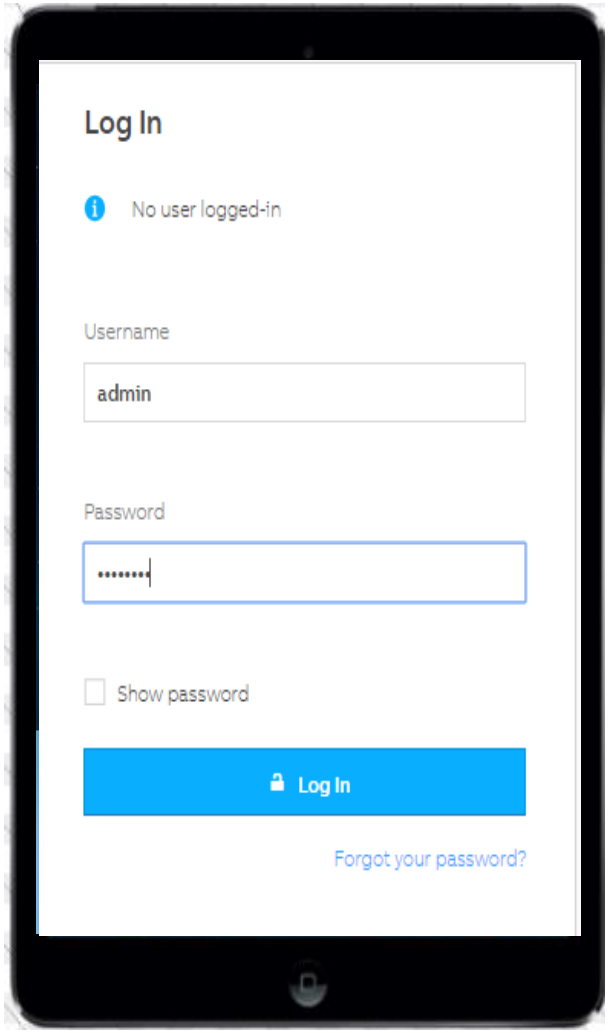

LOGIN WEB User Interface

Inserir Conta (Nome Usuário & Password)

TRIO-50.0/60.0

WEB User Interface TRIO-TM-50.0/60.0

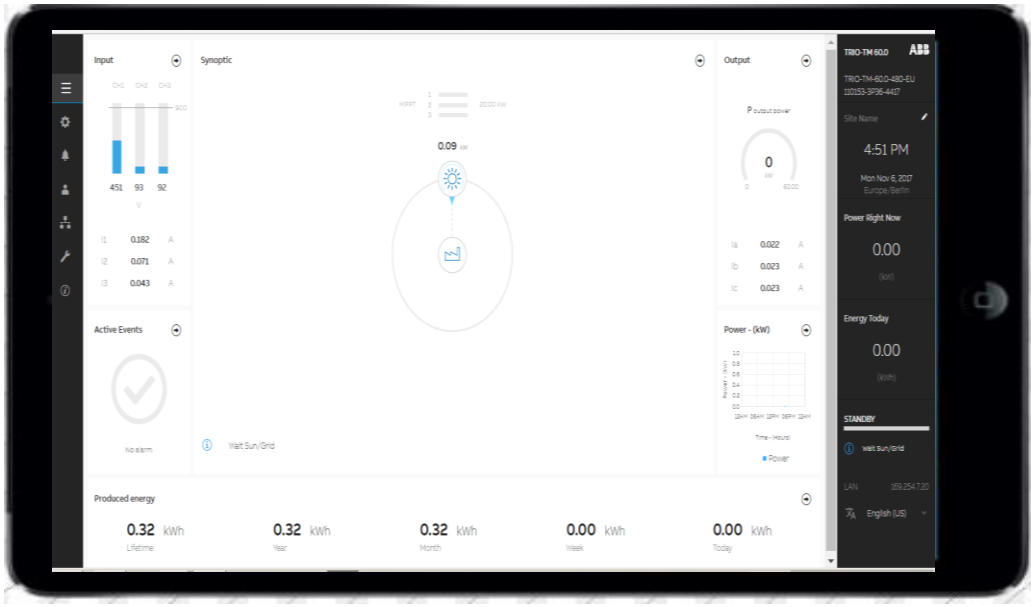

ENTER WEB USER INTERFACE

FIRMWARE UPGRADE

TRIO-50.0/60.0

FW upgrading

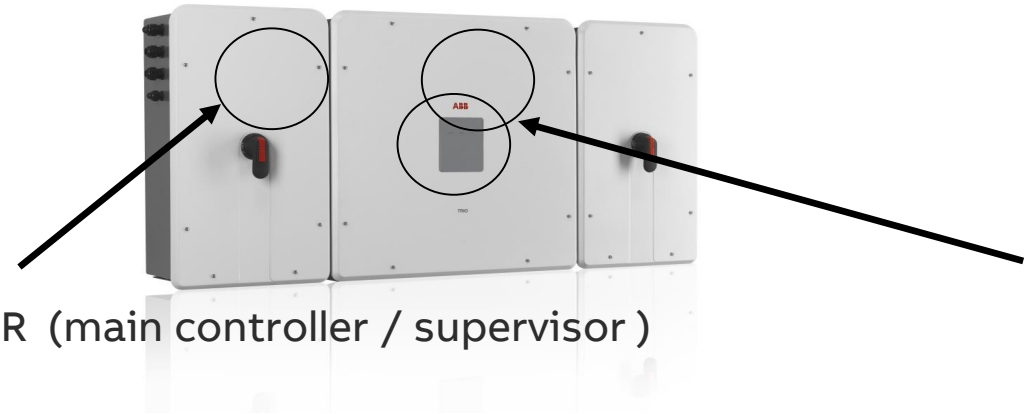

1 x DSP inverter
1 x DSP booster

1 x MICROPROCESSOR (main controller / supervisor)

Inside TRIO-50.0/60.0 are present at least 3 MICROCONTROLLERs which may require to be upgraded.

Firmware package called «**FW BUNDLE**» includes all microcontrollers firmwares inside inverter. The file containing the firmware package has the extension: <.tib>

Coding example (progressive number) → **1741E**
Example: **17**= year 2016; **41**= week #; **E** = day of the week (Friday)

TRIO-50.0/60.0

FW upgrading

Possible options for firmware upgrading

1) Using a PC connected via RS485 and software MANAGER LITE (Upgrade of Inverter side)

2) Using SD CARD (max 32GB) (Upgrade of Inverter side)

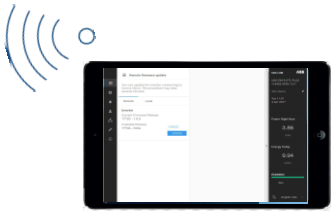

3) Using Web User Interface (only TRIO-TM-50.0/60.0) (Upgrade of Inverter side and/or W-Lan side)

NOTE: the MICROPROCESSOR (main controller) placed inside DCWB is also the manager of the internal FWs upgrade process and FWs revisions control of all internal devices. It is able, in case of replacement of the Power compartment, to upgrade/downgrade its DSPs' FWs automatically .

TRIO-50.0/50.0

FW upgrading

Procedure with PC and software MANAGER-LITE

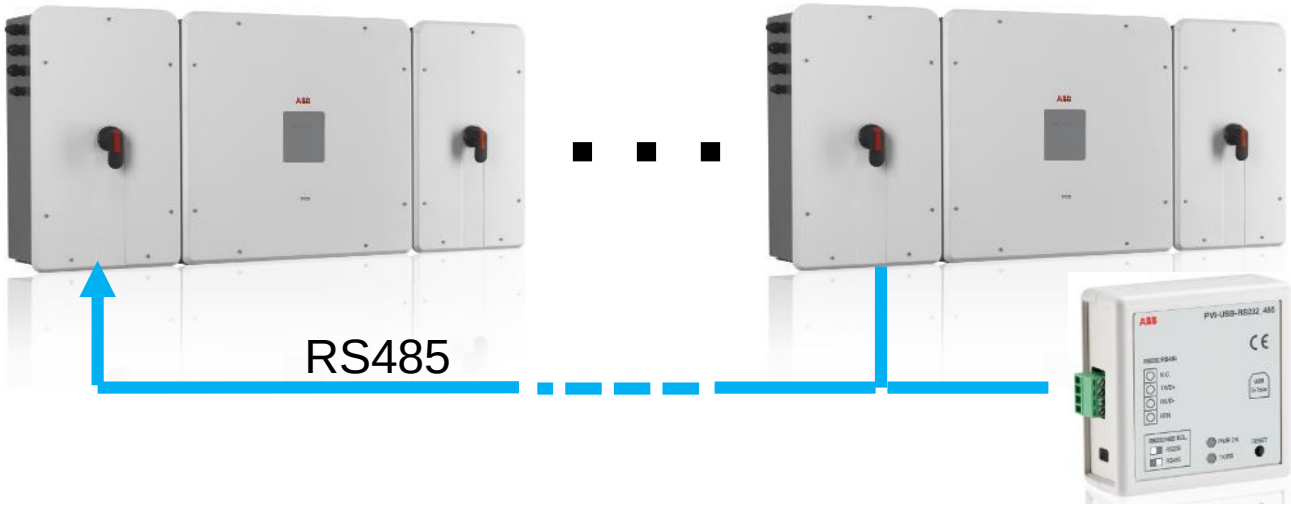

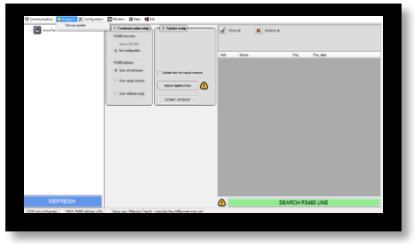

SW MANAGER-LITE

1) Use the port RS485-1 only
2) Push botton “SERCH RS485 LINE” to connect the inverter
3) Push botton “select Update File” and browse the FW file (.tib extension)
5) Push the botton “START UPDATE”
6) Wait for message: “successfully” or “failed” upgrade of all internal devices.

TRIO-50.0/60.0

FW upgrading

Procedimento via SD card

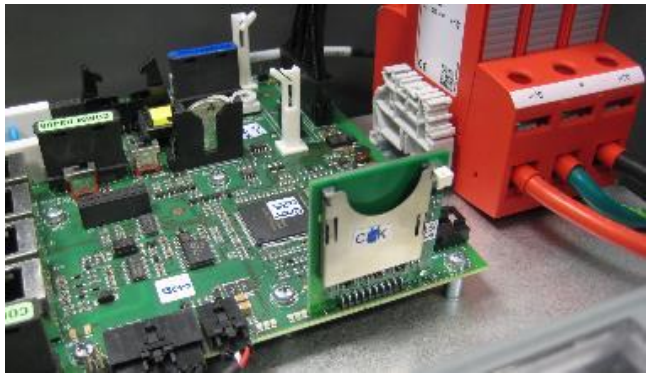

1) Desligar o inversor (DC +AC)
2) Inserir SD card (32GB max) com FW (arquivo .tib) no sloote sem nenhum outro arquivo
3) Ligar o inversor, somento o lado DC
   - FW upgrading irá iniciar.
   - Os LEDs irão descrever o status da atividade (ver manual)
   - Um arquivo de reporte é gerado dentro do cartão SD

Para atualizar uma outra unidade usando o mesmo cartão SD, é necessário excluir os arquivos de relatório gerados durante o processo de atualização

TRIO-50.0/60.0

FW upgrading

Procedimento usando Web Used Interface (only TRIO-TM)

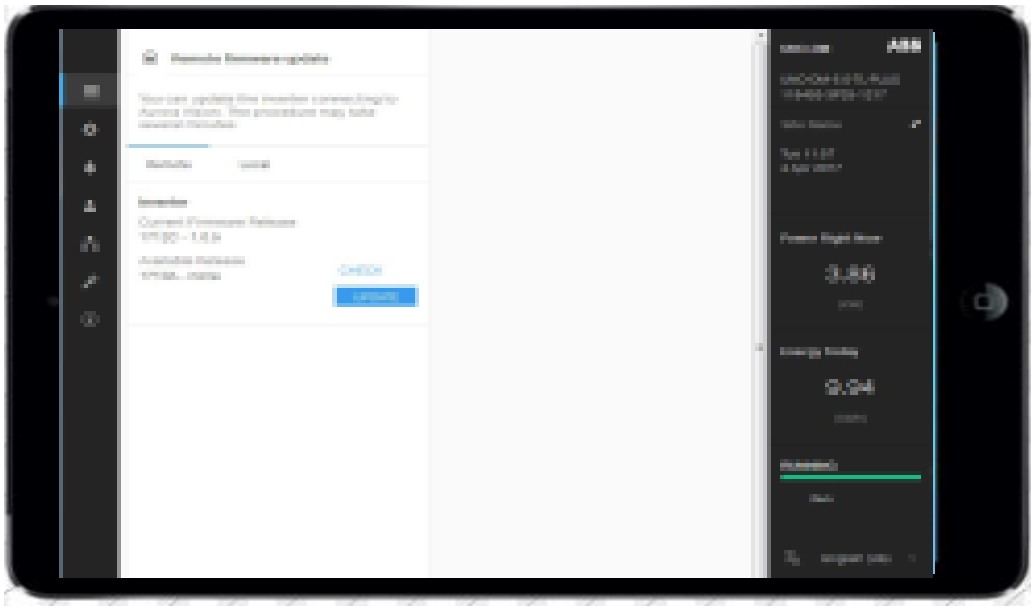

FIRMWARE UPGRADING

VISION PORTAL

TRIO-50.0/60.0

Vision portal

3 diferentes possibilidades

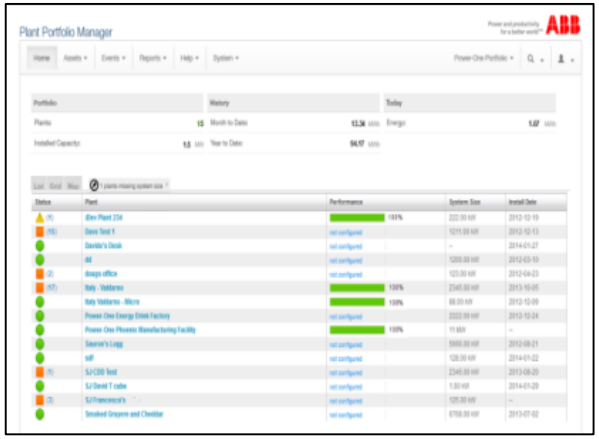

Plant Portfolio Manager

- Interface Web avançada ajudando operadores (EPC, instalador,…) a gerenciar um portfólio de usinas
- Nota: “Site Owner” account não pode accessor esta tela

Plant Viewer

- Interface de página da web simples que permite que proprietários de sites residenciais e comerciais monitorem suas próprias plantas de maneira fácil de visualizar
- Nota: “Site Owner” account pode acessar o *Plant Viewer* somente

Plant Viewer for Mobile

- É uma versão móvel do Plant Viewer
- Nota: acessível por qualquer conta Aurora Vision®

TRIO-50.0/60.0

Vision portal

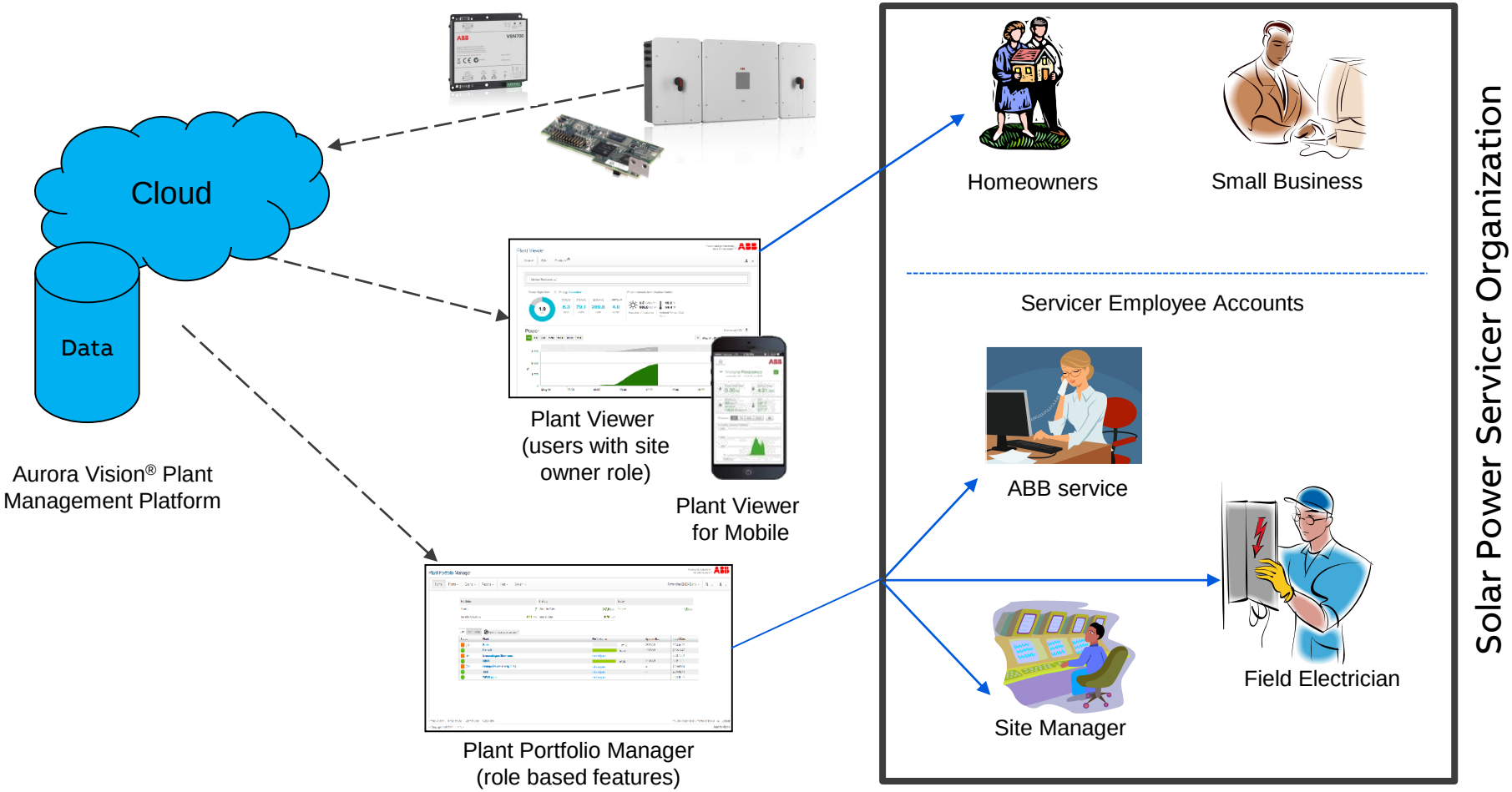

TRIO-50.0/60.0

Vision portal

Plant portfolio manager (Monitoramento Profissional)

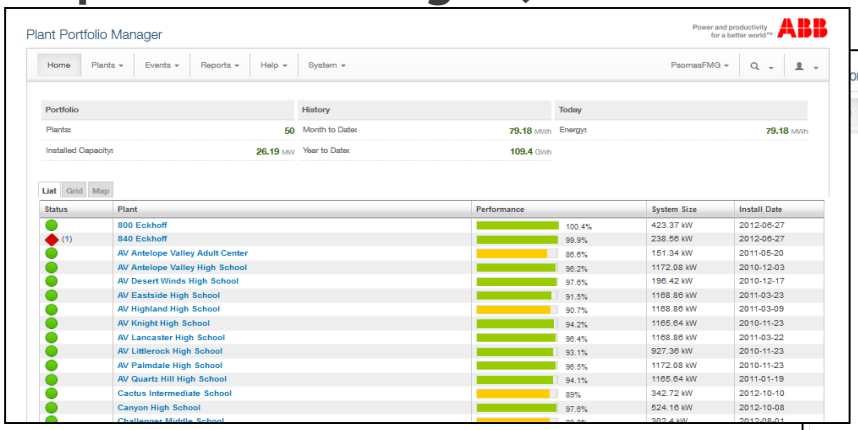

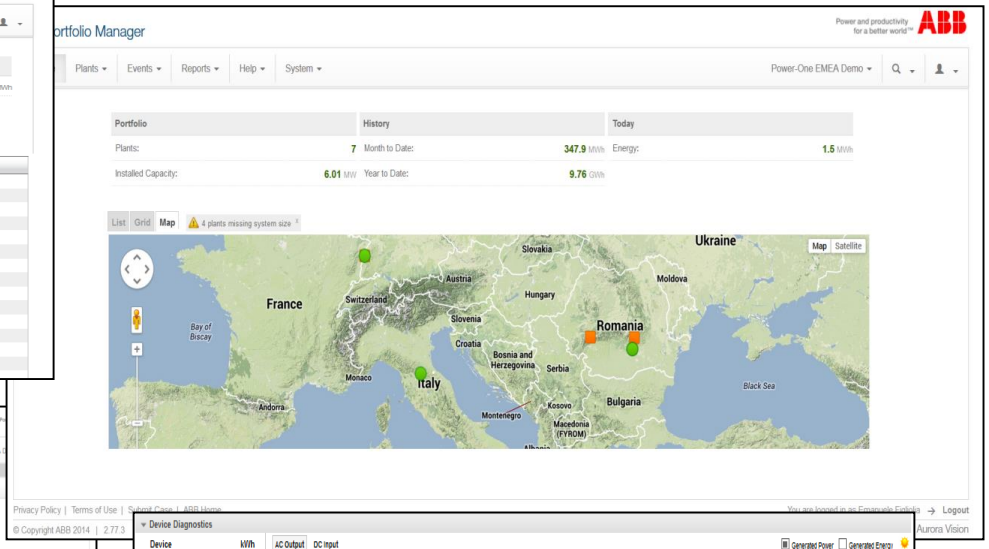

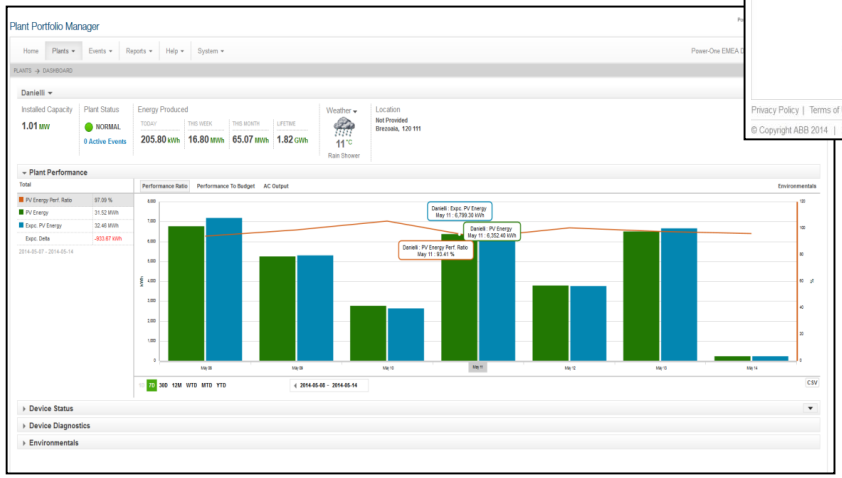

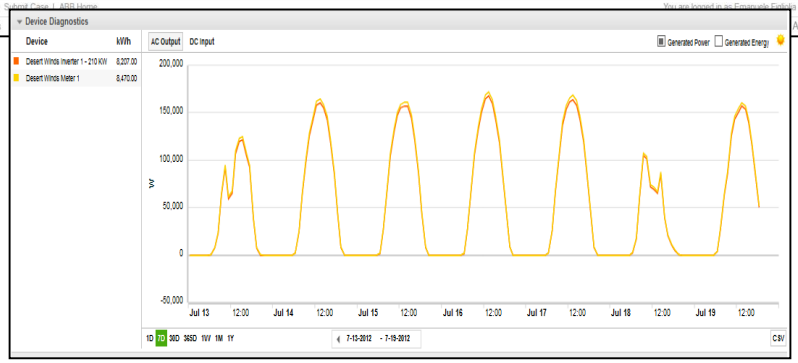

TRIO-50.0/60.0

Vision portal

PlantViewer (Tela simplificada para Clientes Finais)

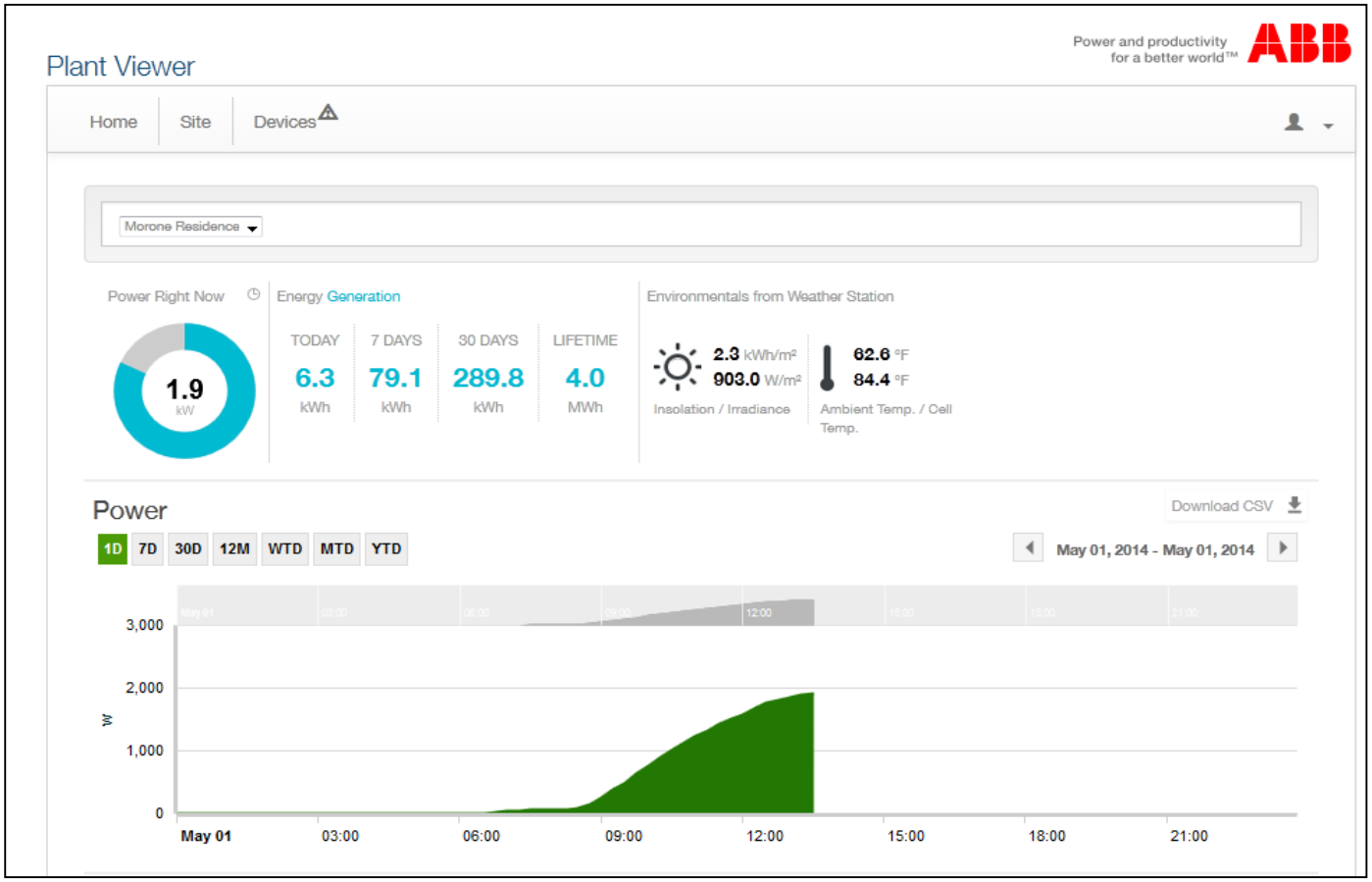

TRIO-50.0/60.0

Vision portal

Plant Viewer for mobile (Tela Simplificada para Clientes Finais)

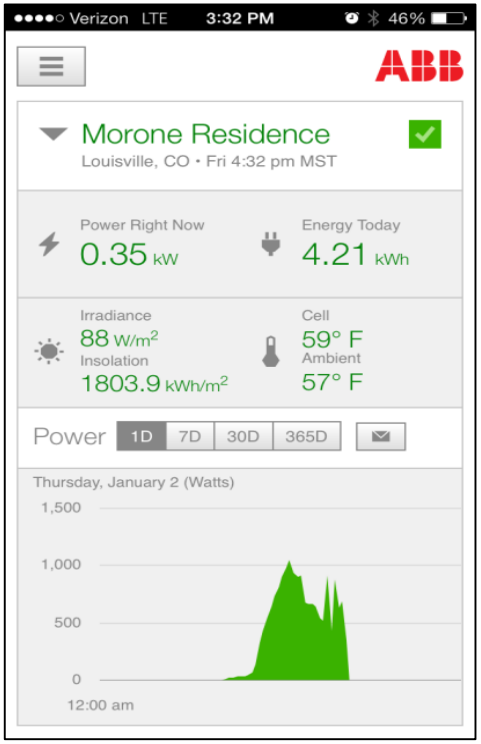

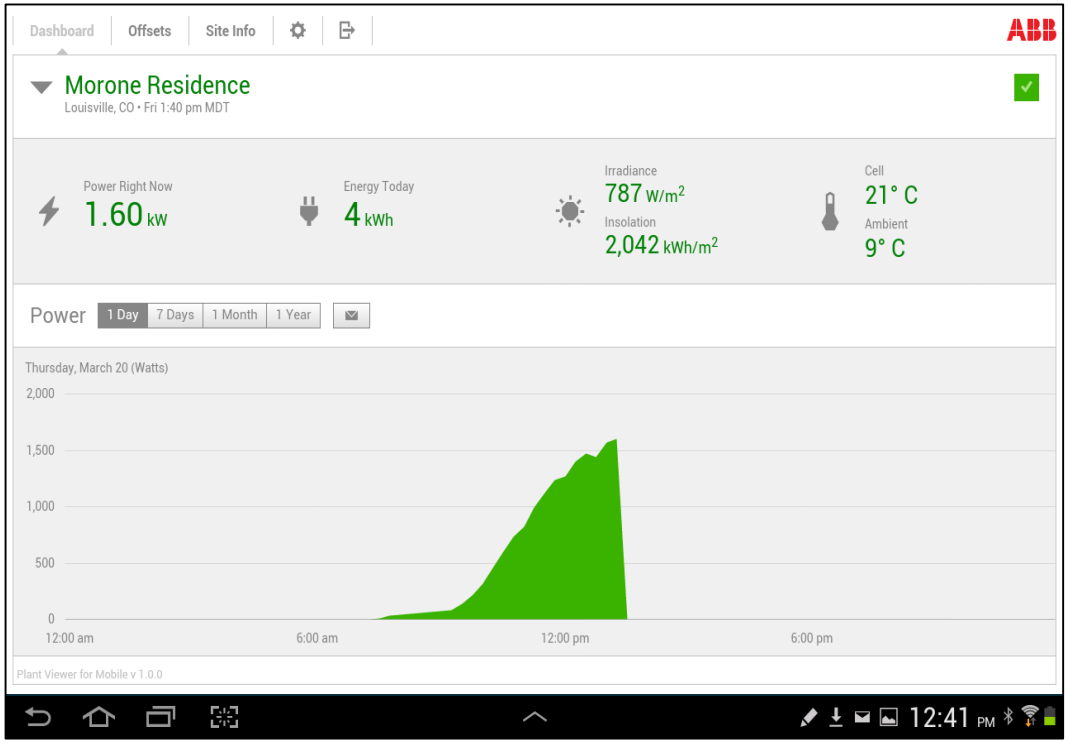

DATA-LOGGERS

TRIO-50.0/60.0

Monitoring notes

String inverters	local wireless monitoring	Remote Monitoring via external router (Vision portal)
TRIO-50.0/60.0-TL	VSN300 WiFi LOGGER CARD	VSN700 LOGGER VSN300 WiFi LOGGER CARD
TRIO-TM-50.0/60.0	EMBEDDED WiFi LOGGER	VSN700 LOGGER EMBEDDED WiFi LOGGER 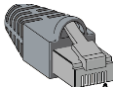 EMBEDDED Ethernet plug